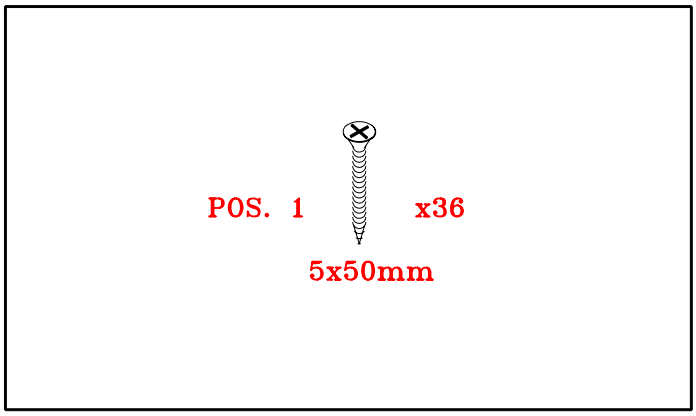
POS. 1
x36
5x50mm

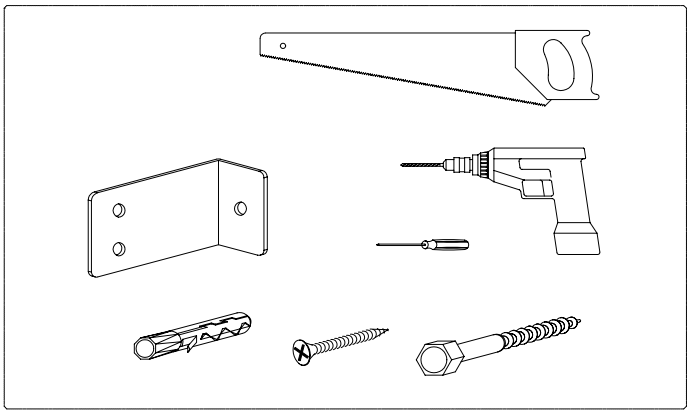

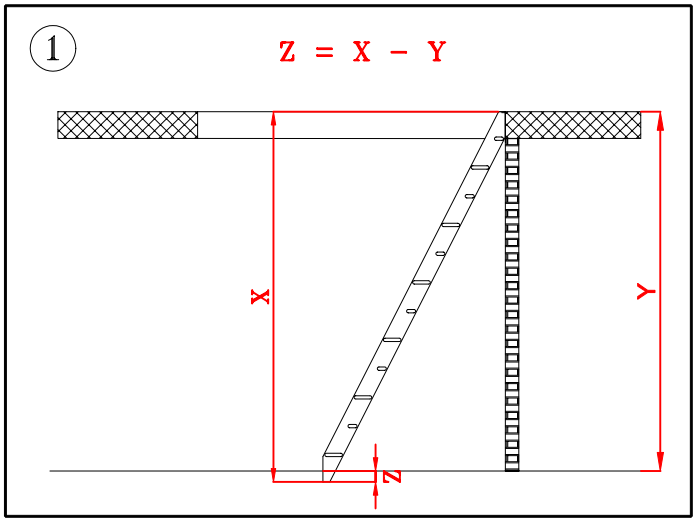
1
Z = X - Y
X
Y
Z

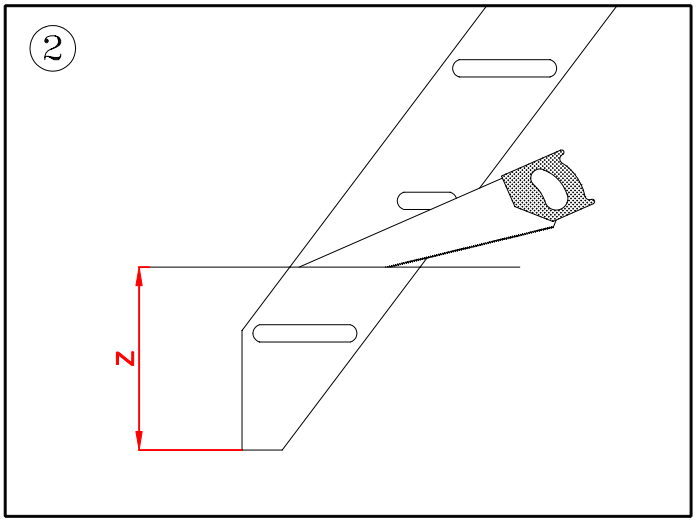
2
Z

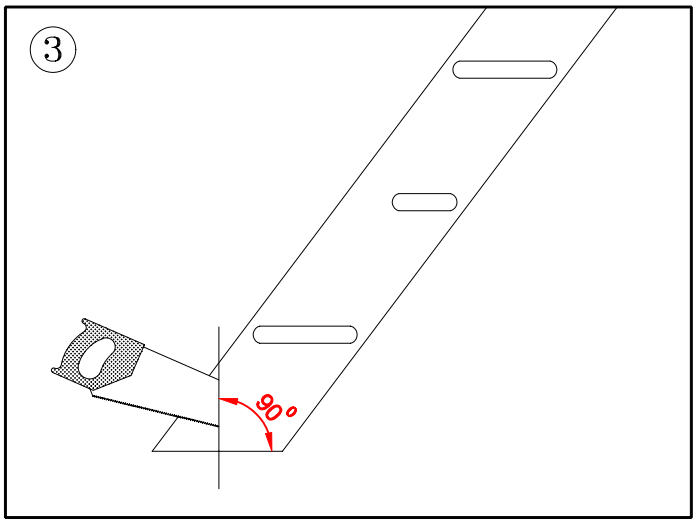
3
90°

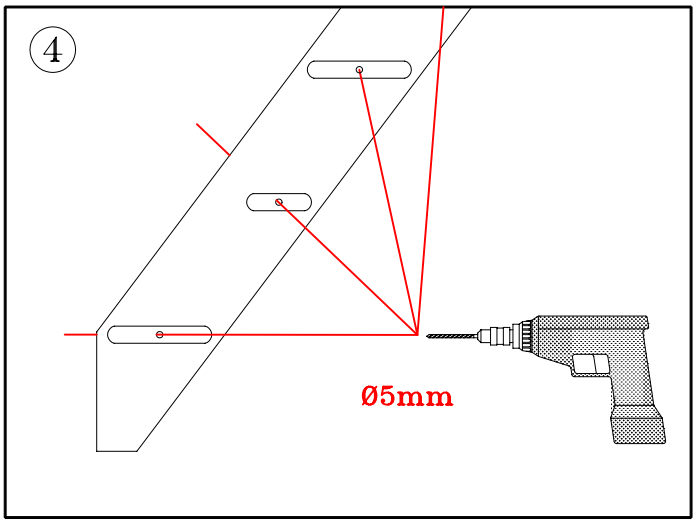
4
Ø5mm

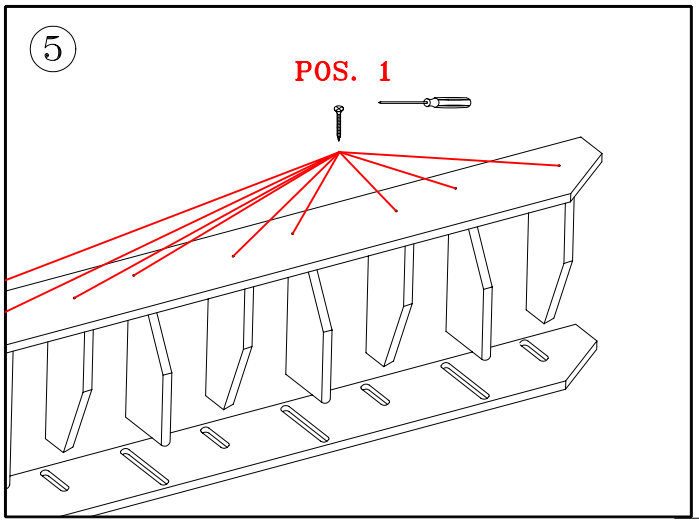
5
POS. 1

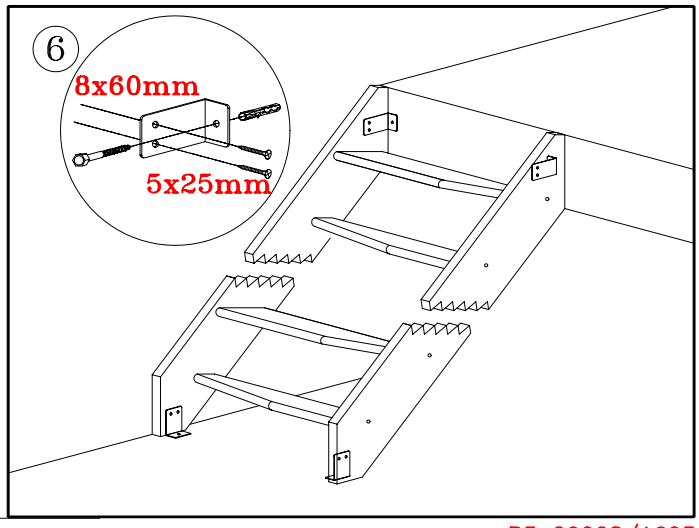
6
8x60mm
5x25mm

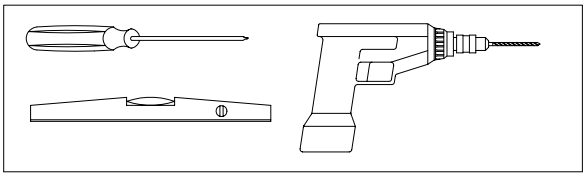

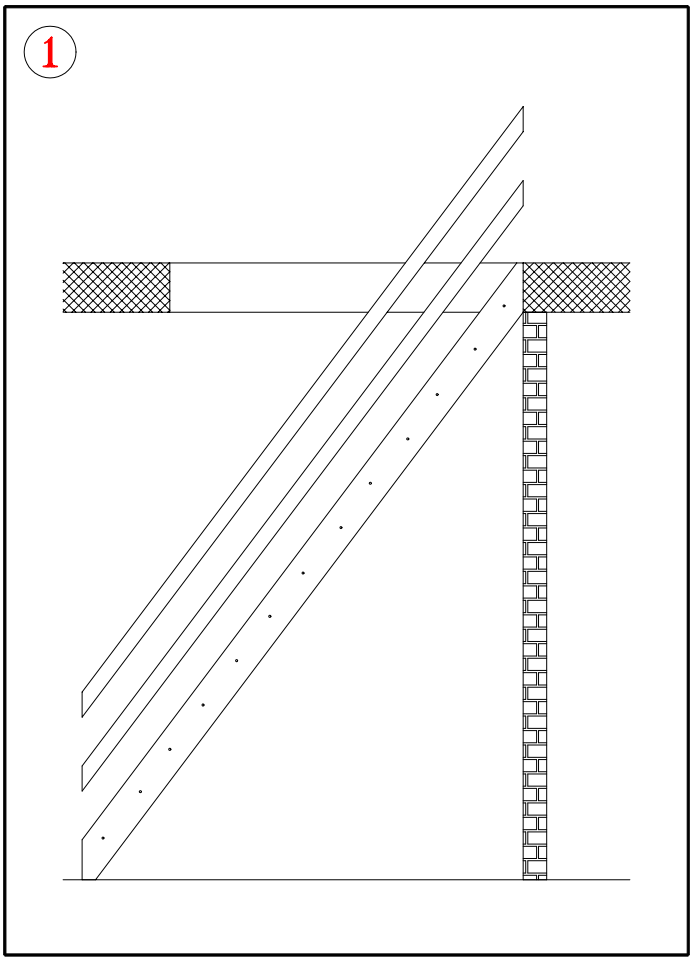

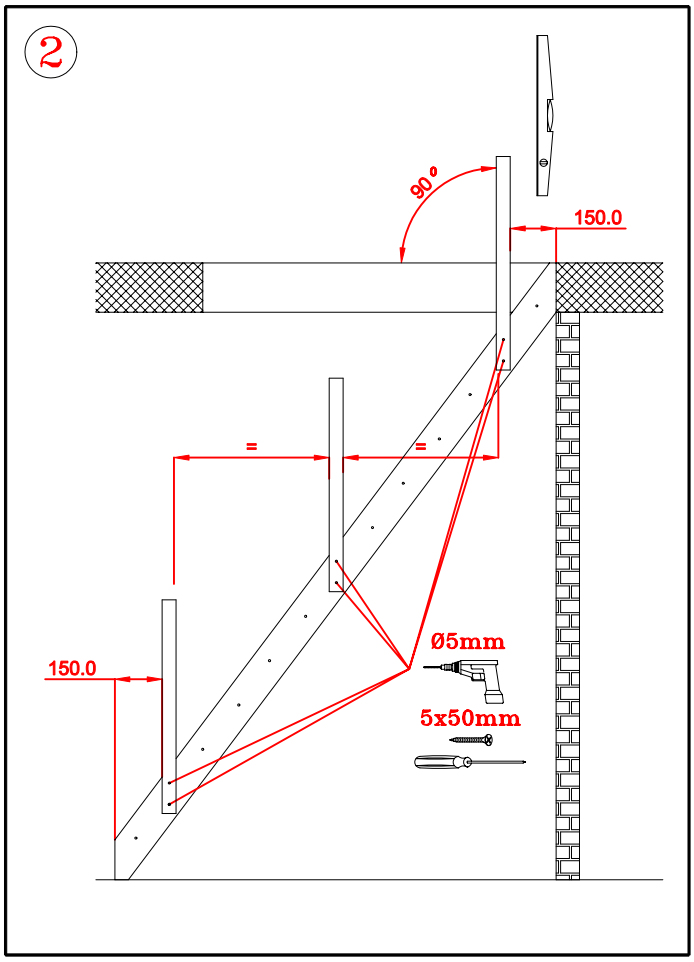

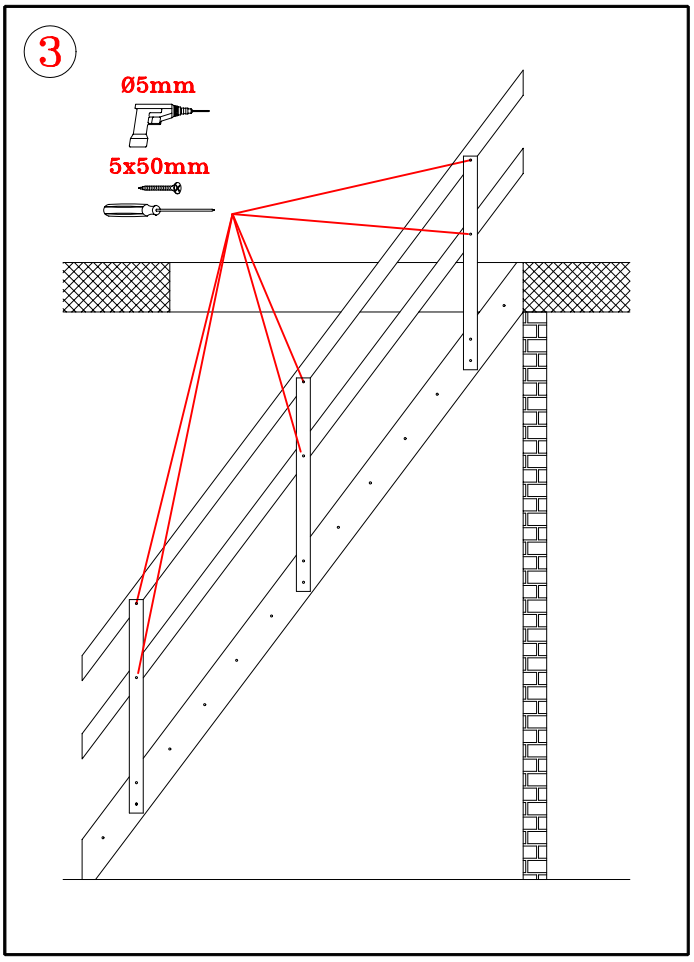

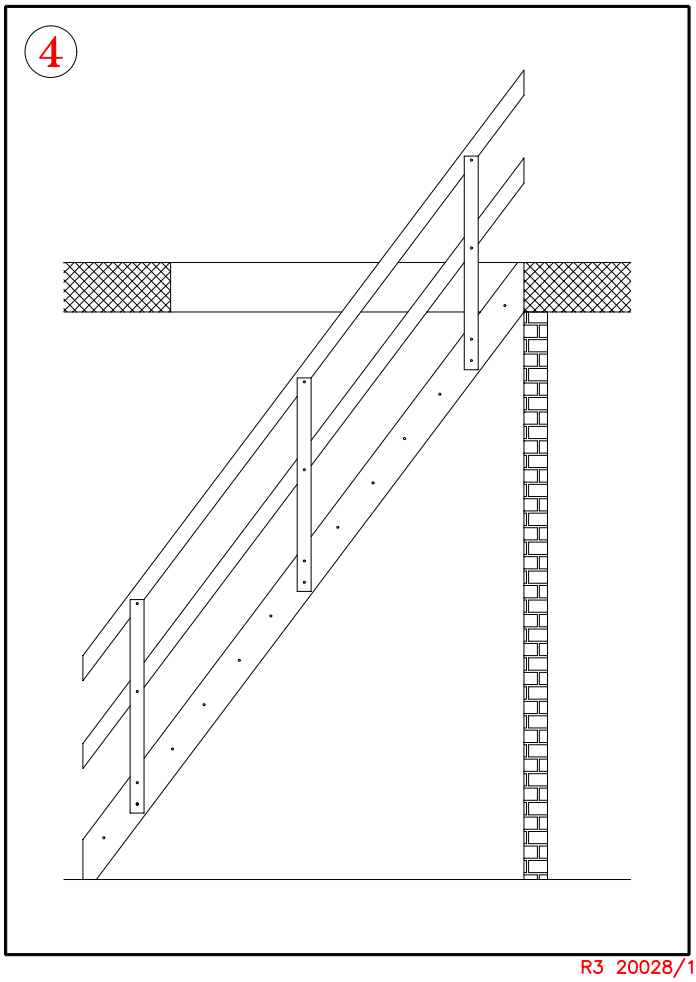

R3 20028/160305