DRAPER®

SPARE PARTS LISTING SHEET FOR

33cc Petrol Backpack Blower

Part A

Stock No.29297 **Part No.BP33**

KEY No.	PART No.	STOCK No.	DESCRIPTION
1	YGP-BP33-1	30428	Locknut
2	YGP-BP33-2	30429	Washer
3	YGP-BP33-3	30430	Harness assembly
4	YGP-BP33-4	30431	Blowpipe
5	YGP-BP33-5	30432	Nylon clip
6	YGP-BP33-6	30433	Back cushion
7	YGP-BP33-7	30434	Frame
8	YGP-BP33-8	30435	Self tapping screw
9	YGP-BP33-9	30436	Fan guard
10	YGP-BP33-10	30437	Shock absorber
11	YGP-BP33-11	30439	Self tapping screw
12	YGP-BP33-12	30440	Rear fan cover
13	YGP-BP33-13	30441	Nut
14	YGP-BP33-14	30442	Spring washer
15	YGP-BP33-15	30443	Washer
16	YGP-BP33-16	30444	Flywheel
17	YGP-BP33-17	30448	Gasket
18	YGP-BP33-18	30450	Front fan cover
19	YGP-BP33-19	30451	Square nut
20	YGP-BP33-20	30452	O-rings
21	YGP-BP33-21	30453	Washer
22	YGP-BP33-22	30455	Screw
23	YGP-BP33-23	30457	Shield
24	YGP-BP33-24	30459	Starter assembly
25	YGP-BP33-25	30460	Screw
26	YGP-BP33-26	30461	Bend pipe
27	YGP-BP33-27	30463	Revolving joint
28	YGP-BP33-28	30464	Hose

KEY No.	PART No.	STOCK No.	DESCRIPTION
29	YGP-BP33-29	30465	Blower pipe A
30	YGP-BP33-30	30466	Blower pipe B
31	YGP-BP33-31	30467	Blower pipe C1
32	YGP-BP33-32	30468	Screw
33	YGP-BP33-33	30469	Steel clamp
34	YGP-BP33-34	30470	Left control handle
35	YGP-BP33-35	30472	Wafer stop switch
36	YGP-BP33-36	30473	Spindle sleeve
37	YGP-BP33-37	30477	Stop switch
38	YGP-BP33-38	30480	Return spring
39	YGP-BP33-39	30481	Washer
40	YGP-BP33-40	30482	Retainer ring
41	YGP-BP33-41	30486	Saddle gasket
42	YGP-BP33-42	30490	Right control handle
43	YGP-BP33-43	30491	Throttle lever
44	YGP-BP33-44	30492	Retainer lever
45	YGP-BP33-45	30494	Handle shaft
46	YGP-BP33-46	30495	Washer
47	YGP-BP33-47	30496	Screw
48	YGP-BP33-48	30497	Spring washer
49	YGP-BP33-49	30498	Throttle wire
50	YGP-BP33-50	30499	Threaded pipe
51	YGP-BP33-51	30500	Lead wire
52	YGP-BP33-52	30501	Pull tab straps
53	YGP-BP33-53	30502	Screw
54	YGP-BP33-54	30503	Washer
55	YGP-BP33-55	30504	Hose clip

Helpline: (023) 8049 4344. **Sales Desk:** (023) 8049 4333. **General Enquiries:** (023) 8026 6355.

DRAPER TOOLS LTD, HURSLEY ROAD, CHANDLER'S FORD, EASTLEIGH, HANTS. SO53 1YF. U.K website: www.drapertools.com e-mail: sales@drapertools.com

KCMC090113

DRAPER®

SPARE PARTS DRAWING SHEET FOR

33cc Petrol Backpack Blower

Part A

Stock No.29297 **Part No.BP33**

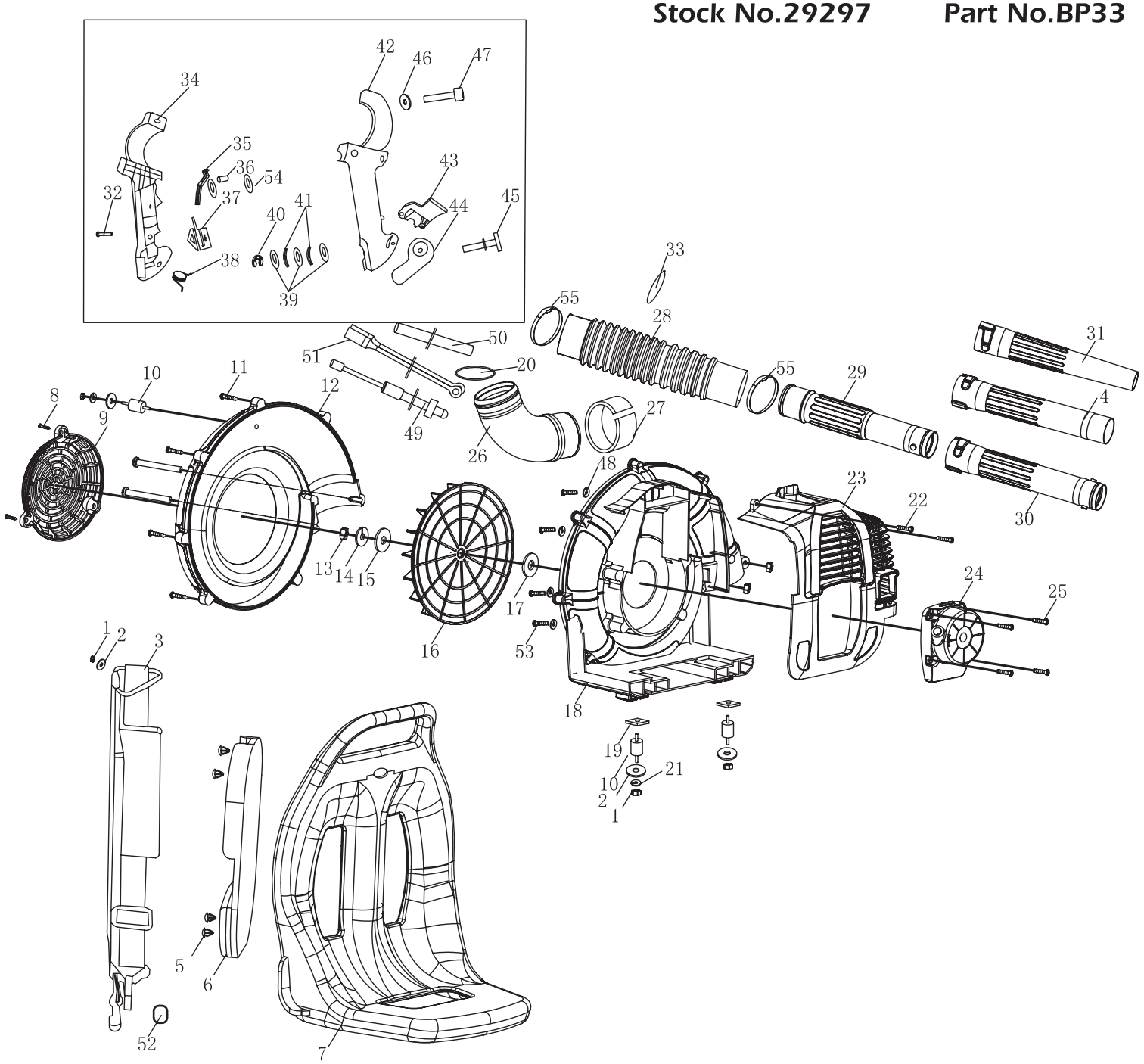

Helpline: (023) 8049 4344. **Sales Desk:** (023) 8049 4333. **General Enquiries:** (023) 8026 6355.

DRAPER TOOLS LTD, HURSLEY ROAD, CHANDLER'S FORD, EASTLEIGH, HANTS. SO53 1YF. U.K website: www.drapertools.com e-mail: sales@drapertools.com

KCMC090113

DRAPER®

SPARE PARTS LISTING SHEET FOR

33cc Petrol Backpack Blower

Part B

Stock No.29297 **Part No.BP33**

KEY No.	PART No.	STOCK No.	DESCRIPTION
1	YGP-BP33-56	30505	Spindle sleeve
2	YGP-BP33-57	30506	Fuel filter
3	YGP-BP33-58	30507	Rotor
4	YGP-BP33-59	30508	Spark plug
5	YGP-BP33-60	30509	Cylinder top baffle
6	YGP-BP33-61	30510	Bolt
7	YGP-BP33-62	30511	Cylinder
8	YGP-BP33-63	30512	Cylinder gasket
9	YGP-BP33-64	30513	Piston ring
10	YGP-BP33-65	30515	Piston
11	YGP-BP33-66	30516	Piston pin
12	YGP-BP33-67	30517	Snap ring
13	YGP-BP33-68	30518	Needle bearing
14	YGP-BP33-69	30519	Fuel tank cap
15	YGP-BP33-70	30520	Crank shaft assembly
16	YGP-BP33-71	30521	Bearing
17	YGP-BP33-72	30522	Crankcase gasket
18	YGP-BP33-73	30523	Cover knob
19	YGP-BP33-74	30525	Rear crankcase
20	YGP-BP33-75	30526	Oil seal
21	YGP-BP33-76	30527	Starter pulley comp
22	YGP-BP33-77	30528	Starter
23	YGP-BP33-78	30529	Bolt
24	YGP-BP33-79	30530	Woodruff key
25	YGP-BP33-80	30531	Front crankcase
26	YGP-BP33-81	30532	Retaining ring
27	YGP-BP33-82	30533	Bolt
28	YGP-BP33-83	30534	Oil seal
29	YGP-BP33-84	30535	Cleaner cover

KEY No.	PART No.	STOCK No.	DESCRIPTION
30	YGP-BP33-85	30536	Muffler gasket
31	YGP-BP33-86	30537	Muffler assembly
32	YGP-BP33-87	30538	Heat shield
33	YGP-BP33-88	30539	Bolt
34	YGP-BP33-89	30540	Washer
35	YGP-BP33-90	30541	Ignition coil spacer
36	YGP-BP33-91	30542	Lead wire
37	YGP-BP33-92	30543	Ignition coil
38	YGP-BP33-93	30544	Bolt
39	YGP-BP33-94	30545	Washer
40	YGP-BP33-95	30546	Spring washer
41	YGP-BP33-96	30547	Bolt
42	YGP-BP33-97	30548	Fuel tank
43	YGP-BP33-98	30549	Choke handle
44	YGP-BP33-99	30550	Air filter element
45	YGP-BP33-100	30551	Bolt assembly
46	YGP-BP33-101	30552	Insulator gasket
47	YGP-BP33-102	30553	Insulator
48	YGP-BP33-103	30554	Bolt assembly
49	YGP-BP33-104	30555	Carburettor gasket
50	YGP-BP33-105	30556	Carburettor cap
51	YGP-BP33-106	30557	Carburettor gasket
52	YGP-BP33-107	30558	Pipe clip
53	YGP-BP33-108	30559	Pipe
54	YGP-BP33-109	30563	Bolt assembly
55	YGP-BP33-110	30564	Washer
56	YGP-BP33-111	30566	Choke
57	YGP-BP33-112	30591	Cleaner base
58	YGP-BP33-113	30592	Primer pump assembly

Helpline: (023) 8049 4344. **Sales Desk:** (023) 8049 4333. **General Enquiries:** (023) 8026 6355.

DRAPER TOOLS LTD, HURSLEY ROAD, CHANDLER'S FORD, EASTLEIGH, HANTS. SO53 1YF. U.K website: www.drapertools.com e-mail: sales@drapertools.com

KCMC090113

SPARE PARTS DRAWING SHEET FOR

33cc Petrol Backpack Blower

Part B

Stock No.29297 **Part No.BP33**

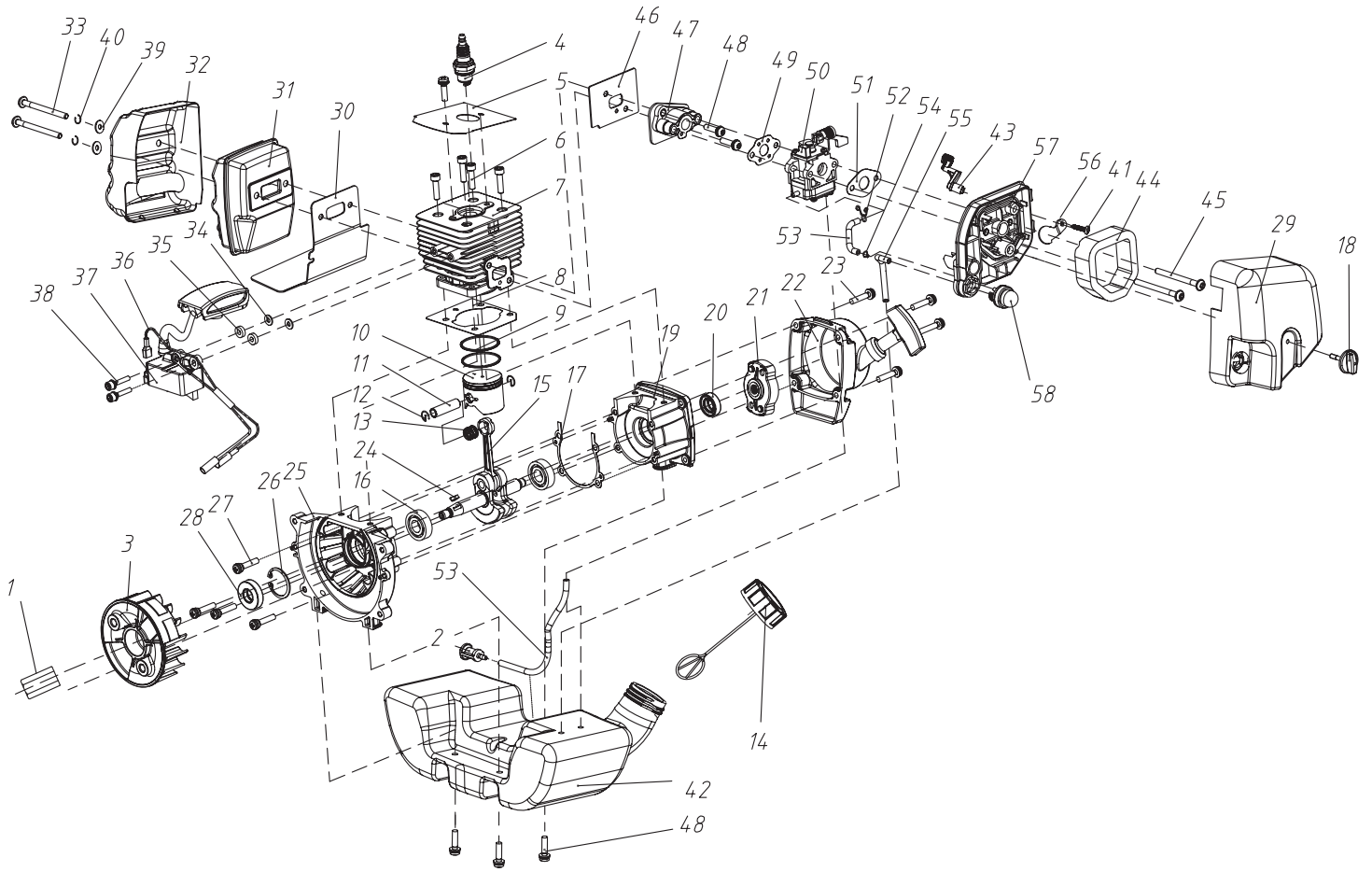

Helpline: (023) 8049 4344. **Sales Desk:** (023) 8049 4333. **General Enquiries:** (023) 8026 6355.

DRAPER TOOLS LTD, HURSLEY ROAD, CHANDLER'S FORD, EASTLEIGH, HANTS. SO53 1YF. U.K website: www.drapertools.com e-mail: sales@drapertools.com

KCMC090113